Hotel Hardware

Elevator Reader

HR500A ELEVATOR READER

Online offline reader with contactless MIFARE reader for access to specific floors of a building. This reader is part of the Skyline Brilliance series and consists of a glass panel that is installed in an elevator panel. The standard reader is supplied in black. However, we provide a choice of RAL colours for the colour design of the glass panel.

▼ ELEVATOR READER

MH8734	HR500A Elevator Reader, MIFARE Classic

▼ ACCESSORIES AND OPTIONS

MH8772	Built-in power supply unit 24 W
MH8773	Built-in power supply unit 54 W

Dimensions

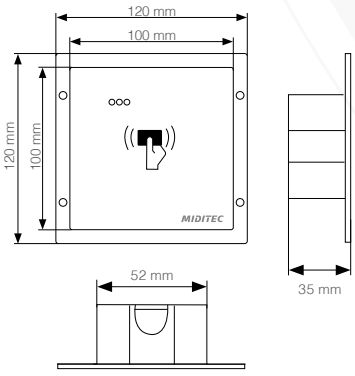

► FEATURES

- Contactless reader technology
- Online operation (option) with HAC7000/32 Control Unit
- Optical status display via 3 LEDs
- Acoustic feedback via signal transmitter
- Permanent door release
- RS485 interface (2-wire) for connection to control unit
- Power supply via external power supply unit
- Reading range up to 5 cm
- Installation in elevator panel

TECHNICAL DATA

Voltage supply	12 to 24 V DC external
Max. power input	1.2 W
Max. power consumption	60 mA at 12 V DC
Ambient temperature IP	0 - 55 °C
Protection class	52
Dimensions reader (H x W)	100 x 100 mm
Dimensions mounting plate and assembly (H x W x D)	120 x 120 x 35 mm
Interface	RS485
Colour	Black
Mounting	In elevator
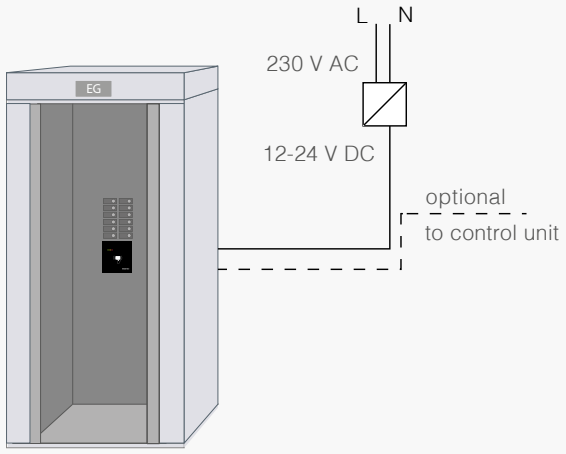
Installation example