Hotel Hardware

Access Reader for Room Controller

HRC400 BJE ACCESS READER

Online offline access reader with contactless MIFARE reader. This reader has been developed for Busch-Jaeger switch ranges of the design series future(R) linear and is supplied in studio white as standard. Further colour options on request.

Note: The HRC400 BJE Access Reader is operated together with an HDC15-V3 Room Controller.

▼ ACCESS READER

MH8226	HRC400, MIFARE Classic

▼ ACCESSORIES AND OPTIONS

MH9200	HDC15-V3 Room Controller
MH8772	Built-in power supply unit 24 W
MH8773	Built-in power supply unit 54 W

Dimensions

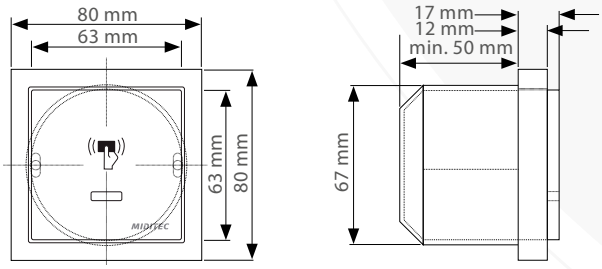

▶ FEATURES

- Contactless reader technology
- Online operation (option) with HAC7000/32 Control Unit
- Optical status display via multicolour LED
- Acoustic feedback via signal transmitter
- RS485 interface (2-wire) for connection to room controller
- Power supply via external power supply unit for reader, room controller and door strike
- Reading range up to 5 cm

TECHNICAL DATA

Voltage supply	12 to 24 V DC external
Max. power input	1.2 W
Max. power consumption	60 mA at 12 V DC
Ambient temperature	-10 °C - +55 °C
IP protection class	50
Dimensions (H x W x D)	80 x 80 x 30 mm
Interface	RS485
Colour	Studio white
Mounting	Flush-mounted and cavity-wall socket
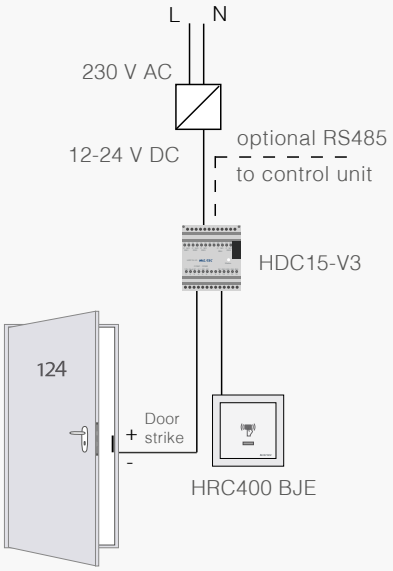
Installation example